Type-A Distributor

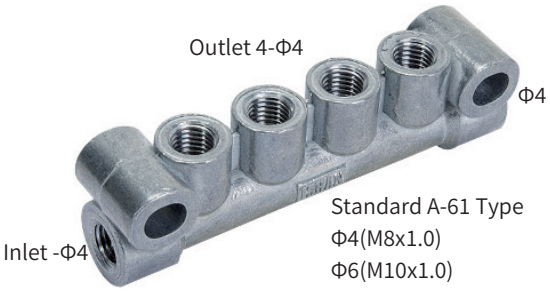

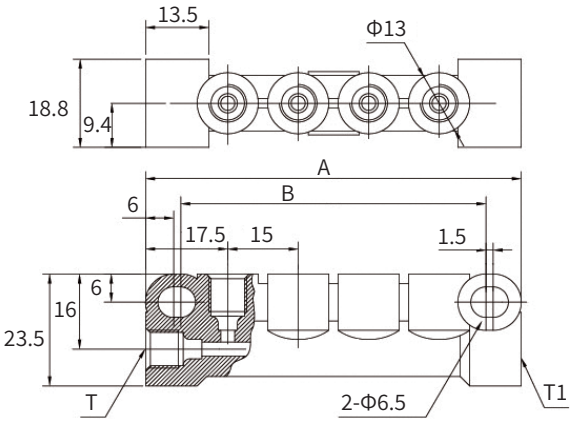

Model	T/T1	Outlet dia.	Inlets+outlets	A	B	N.W(g)
A41	Φ4	2-Φ4	4	48	34-36	59
A42	Φ6	2-Φ4				
A43	Φ6	2-Φ6				
A51	Φ4	3-Φ4	5	64	49-52	76
A52	Φ6	3-Φ4				
A53	Φ6	3-Φ6				
A61	Φ4	4-Φ4	6	80	60-68	96
A62	Φ6	4-Φ4				
A63	Φ6	4-Φ6				
A71	Φ4	5-Φ4	7	96	79-84	113
A72	Φ6	5-Φ4				
A73	Φ6	5-Φ6				
A81	Φ4	6-Φ4	8	112	95-10	135
A82	Φ6	6-Φ4				
A83	Φ6	6-Φ6				
A91	Φ4	7-Φ4	9	128	109-116	145
A92	Φ6	7-Φ4				
A93	Φ6	7-Φ6				
A101	Φ4	8-Φ4	10	144	123-132	164
A102	Φ6	8-Φ4				
A103	Φ6	8-Φ6			.	
A121	Φ4	10-Φ4	12	176	153-164	201
A122	Φ6	10-Φ4				
A123	Φ6	10-Φ6				

AE Distributor

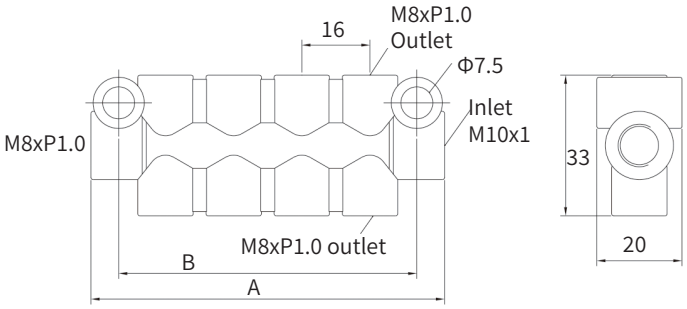

Specification

Model	Outlets	A(mm)	B(mm)	N.W(Φ4)	N.W(Φ6)	Outlet dia.	Inlet dia.
AE-4	4	48	35	73g	71g	Φ4	Φ6 or Φ4
AE-6	6	65	51	103g	101g		
AE-8	8	83	70	128g	124g		
AE-10	10	97	83	151g	148g		
AE-12	12	112	99	179g	171g		

Order Code

AE - 8 - 6 - S

4~12	Number of outlets
4	Inlet diameter Φ4
6	Inlet diameter Φ6
S	Screw-in type fittings
N	No fittings